METHVEN

DESIGNED NEW ZEALAND & ENGINEERED

148MM WALL MOUNTED SHOWER ARM

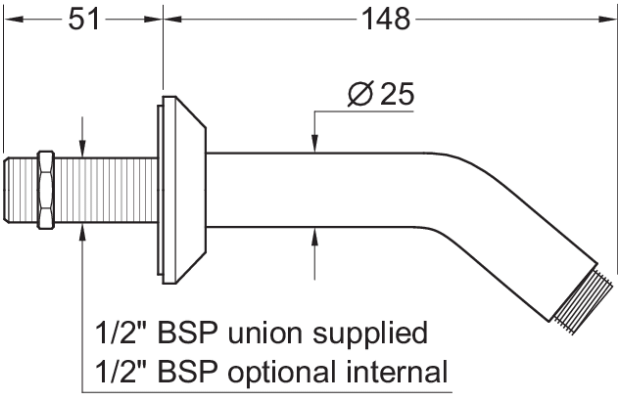



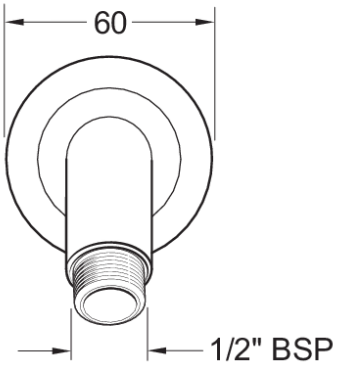

CONSTRUCTION: Brass

INLET CONNECTIONS: ½" BSP

- Brass Construction
- Comes Complete With 1/2" Bsp Connection

SAW148	Chrome

WRAS APPROVED PRODUCT
251202003

1 YEAR WARRANTY* TERMS & CONDITIONS APPLY

Please Note: Flow rate will be dictated by installation configurations.
Please ensure to check the appropriate flow restrictor information if applicable.
***Please refer to website for full warranty details.**

FREEPHONE: 0800 195 1602 | FAX ORDERS: 08444 068 690 | EMAIL: SALES@UK.METHVEN.COM

methven.com

THE INFORMATION ON THIS SPECIFICATION DOCUMENT WAS CORRECT AT THE DATE OF ISSUE. SOME VARIATION MAY OCCUR DUE TO THE MANUFACTURING TOLERENCES AND SITE SPECIFIC CONDTIONS.