METHVEN

DESIGNED NEW ZEALAND & ENGINEERED

KIRI MK2 HANDSET - MATTE BLACK

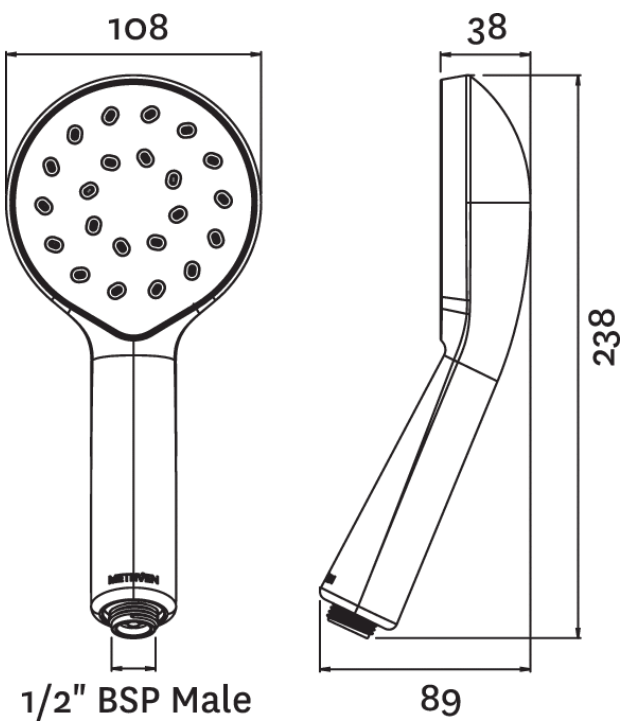



CONSTRUCTION: ABS
SUPPLY: Suitable For Low Pressure Systems
INLET CONNECTIONS: ½" BSP
WORKING PRESSURES: 0.3 - 5.0 bar
CARTRIDGE/VALVE TYPE:N/A

· Water Efficient Without Compromising Performance
· Optimised To Perform At 8 L/Min
· Satinjet® Technology Twin Jets Of Water Collide Into Thousands Of Tiny Droplets To Deliver Voluminous Shower Coverage

KRHSBK	Matte Black

Open Outlet Flow (Bar - l/min)

BAR	0.1	0.3	0.5	1.0	2.0	3.0	4.0	5.0
HANDSET FLOW	3.5	5.3	7	9	8	8.4	8.4	8.2

kiwa approved KUKreg4 ATS 3
2602714

5 YEAR WARRANTY* · TERMS & CONDITIONS APPLY

Please Note: Flow rate will be dictated by installation configurations.
Please ensure to check the appropriate flow restrictor information if applicable.
***Please refer to website for full warranty details.**

FREEPHONE: 0800 195 1602 | FAX ORDERS: 08444 068 690 | EMAIL: SALES@UK.METHVEN.COM methven.com

THE INFORMATION ON THIS SPECIFICATION DOCUMENT WAS CORRECT AT THE DATE OF ISSUE. SOME VARIATION MAY OCCUR DUE TO THE MANUFACTURING TOLERENCES AND SITE SPECIFIC CONDTIONS.