METHVEN

DESIGNED NEW ZEALAND & ENGINEERED

KAHA EASY FIT SHOWER KIT

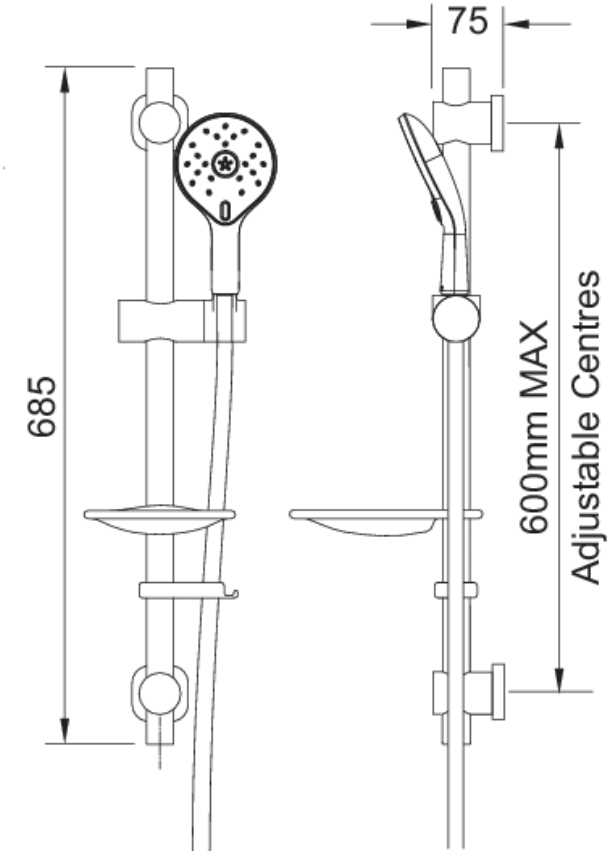



CONSTRUCTION: Brass & ABS
SUPPLY: Suitable For All Plumbing Systems
INLET CONNECTIONS: ½" BSP
WORKING PRESSURES: 0.3 - 5.0 bar
CARTRIDGE/VALVE TYPE:N/A

- Easy To Fit Shower Rail - Simply Twist And Lock Brackets Into Place
- Smooth Easy Clean 1.5M Hose
- Includes Kaha Satinjet Handset
- Two Types Of Spray - Satinjet Body Shower Or Massage
- Easy To Clean Faceplate
- Lifetime Warranty On Handset

EKITo8-KH | **Chrome**

Open Outlet Flow (Bar - l/min)

BAR	0.1	0.3	0.5	1.0	2.0	3.0	4.0	5.0
HANDSET FLOW	3.2	6.2	7.4	7.3	7.7	8.2	0	0

kiwa approved KUKreg4 ATS 3
2406722

WRAS APPROVED PRODUCT
240604035

1 YEAR WARRANTY* TERMS & CONDITIONS APPLY

Please Note: Flow rate will be dictated by installation configurations.
Please ensure to check the appropriate flow restrictor information if applicable.
***Please refer to website for full warranty details.**

FREEPHONE: 0800 195 1602 | FAX ORDERS: 08444 068 690 | EMAIL: SALES@UK.METHVEN.COM

methven.com

THE INFORMATION ON THIS SPECIFICATION DOCUMENT WAS CORRECT AT THE DATE OF ISSUE. SOME VARIATION MAY OCCUR DUE TO THE MANUFACTURING TOLERENCES AND SITE SPECIFIC CONDTIONS.